Shenzhen H-Great Optoelectronic Co., Ltd.

承认书 Approved Sheet

客 户 名 称 ：	
客户物料名称 ：	
客户物料编码 ：	
文 件 编 号 ：	
华 皓 品 名 ：	H-28XFXX3-XXX2XXTX220203-X
华 皓 料 号 ：	

客户

检测员 ：
审 核 ：
批 准 ：
盖 章 ：

华皓

检测员 ：赵小吹
审 核 ：曾秋来
批 准 ：匡建军
日 期 ：20240229

H-28XFXX3-XXX2XXTX220203-X

PLCC LED Ultra-high light efficiency series products have high reliability, high luminous efficiency, and can be used in indoor and outdoor plant lighting and conventional applications.

Applications/产品应用

indoor illumination	室内照明
Plant lighting	植物照明
General lighting	普通照明
General use	一般应用

Features/特性

Size(mm):2.8*3.5*0.65	尺寸（毫米）：2.8*3.5*0.65
Color：white	发光颜色：白光
Thermal resistance: 17K/W	热阻：17K/W
Viewing angle: 120°	发光角度：120°
ESD protection up to 1KV	抗静电：1 kV
Qualications: The product qualication test based on the guidelines of LM-80	质量检测：LM-80
MSL: Level 3	湿敏等级：Level 3
RoHS compliant	通过RoHS认证

H-28XFXX3-XXX2XXTX220203-X

Absolute maximum ratings(Ta=25℃)/最大额定值

Parameters/参数	Symbol/符号	Value/数值	Unit/单位
Power dissipated 功率消耗	P_D	1	W
forward current 正向电流	I_F	≤300	mA
Operating temperature 工作温度	T_{OPR}	-40~+100	℃
Storage temperature 储存温度	T_{STG}	-40~+100	℃
Maximum junction temperature(1) 最大结温	T_J	≤115	℃
Soldering temperature 焊接温度	Reflow soldering 260℃ for 5sec		

Proper current derating must be observed to maintain junction temperature below the Maximum.

Electro optical characteristics(Ta=25℃)/光电特性

Parameters 参数	Test condition 测试条件	Symbol 符号	Min 最小	Typ 典型	Max 最大	Unit 单位
Forward voltage 正向电压	65mA	VF	2.6	--	2.9	V
View Angle 发光角度	65mA	2θ1/2	--	120	--	deg.
Electrostatic discharge 抗静电	HBM	ESD	--	--	1000	V
Thermal resistance 热阻	65mA	RJ-A	--	17	--	K/W

1. Tolerance of luminous flux is ±10%
光通量公差为±10%
2. Tolerance of forward voltage is ±0.05V
正向电压公差±0.05v

H-28XFXX3-XXX2XXTX220203-X

Electro optical chart(Ta=25℃)/光电特性

Part Number 产品型号	Color Rendering Index 显色指数	Brightness efficiency 光效 (lm/W)	Luminous Flux 光通亮 (lm)	CCT色温 (K)
H-28WFG73-HBX2DSTH220203-9	78	200-215	38-40	3000
H-28NFM13-HBX2DSTH220203-9	78	220-235	40-42	4000
H-28CFM13-HBX2DSTH220203-9	78	220-235	40-42	6500

Ranks(sorting current=65mA, Ta=25℃)/档位

Item 项目	Rank 档位	Min 最小值	Max 最大值	Unit 单位
Luminous Flux 光通亮	G7	38	40	lm
	M1	40	42	

Item 项目	Rank 档位	Min 最小值	Max 最大值	Unit 单位
VF电压	V1	2.6	2.7	V
	V2	2.7	2.8	
	V3	2.8	2.9	

H-28XFXX3-XXX2XXTX220203-X

Chroma ticity Coordinates/色坐标

CCT	Bin Code	CIE x	CIE y	Radius a	Radius b	Angle	SDCM
3000K	30W	0.4400	0.4030	0.01946	0.00952	53.1000	5step
4000K	40N	0.380	0.380	0.0156	0.0067	53.7000	5step
6500K	65M	0.3129	0.3371	0.01115	0.00475	58.2300	5step

Typical electrical optical characteristic curves/典型光电特征曲线

Spectrum Distribution
(@IF = 65 mA; T=25℃)

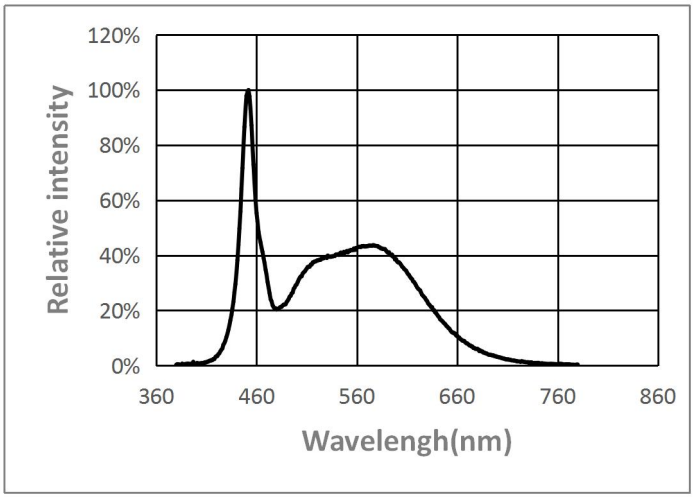

Forward current VS. Forward voltage
(@T = 25℃)

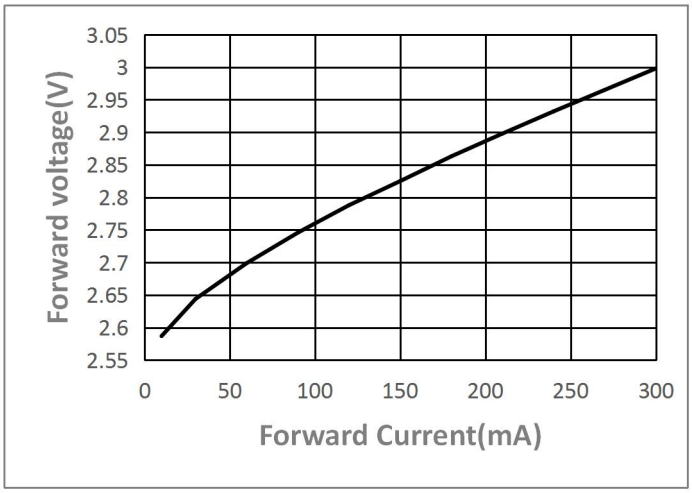

Forward current derating curve
VS.Ambient temperature

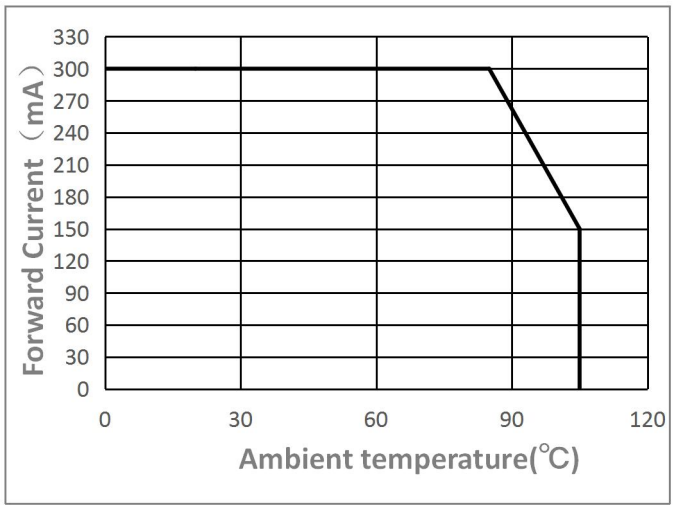

Relative intensity VS. Forward current
(@IF =65 mA; T=25℃)

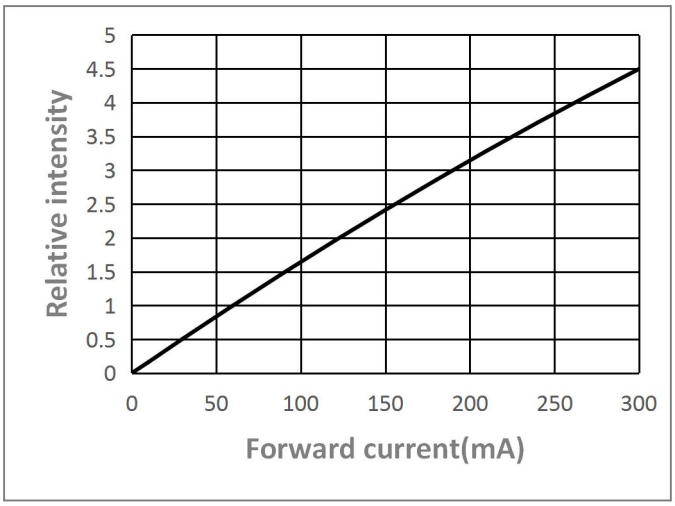

Package dimensions/产品外观尺寸

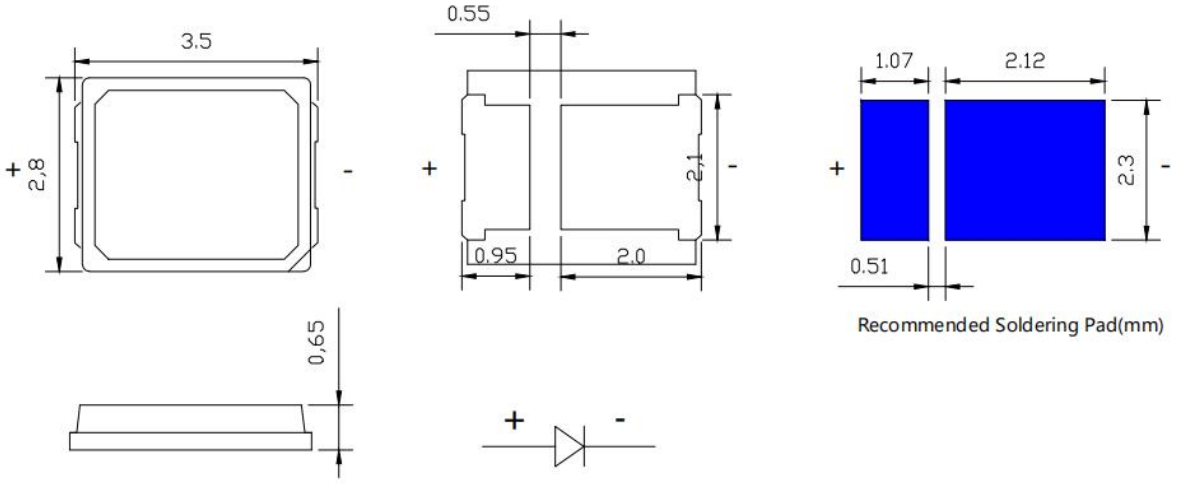

Notes:

1. All dimensions are measured in mm.
2. Tolerance : ± 0.1 mm
3. Approximate Weight : 20.0 mg

Pakaging specifications/包装规格

Product Labeling/产品标签

Label Explanation/标签解释

CPN: Customers Product Number

P/N: Product Number

Lot NO: Lot Number

VF(V): Forward voltage Bin

IV:Luminous intensity rank

CCT:Color temperature grade

QTY (pcs): Package Quantity

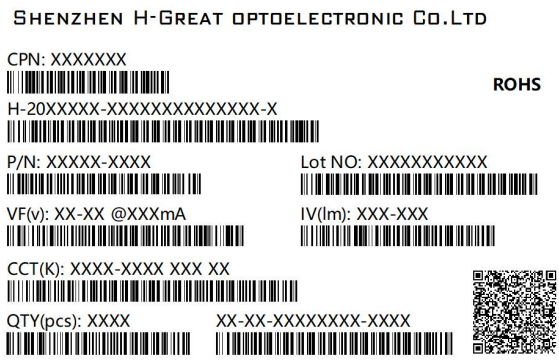

Carrier Tape Dimensions/卷盘包装

Reel Dimensions/卷盘尺寸

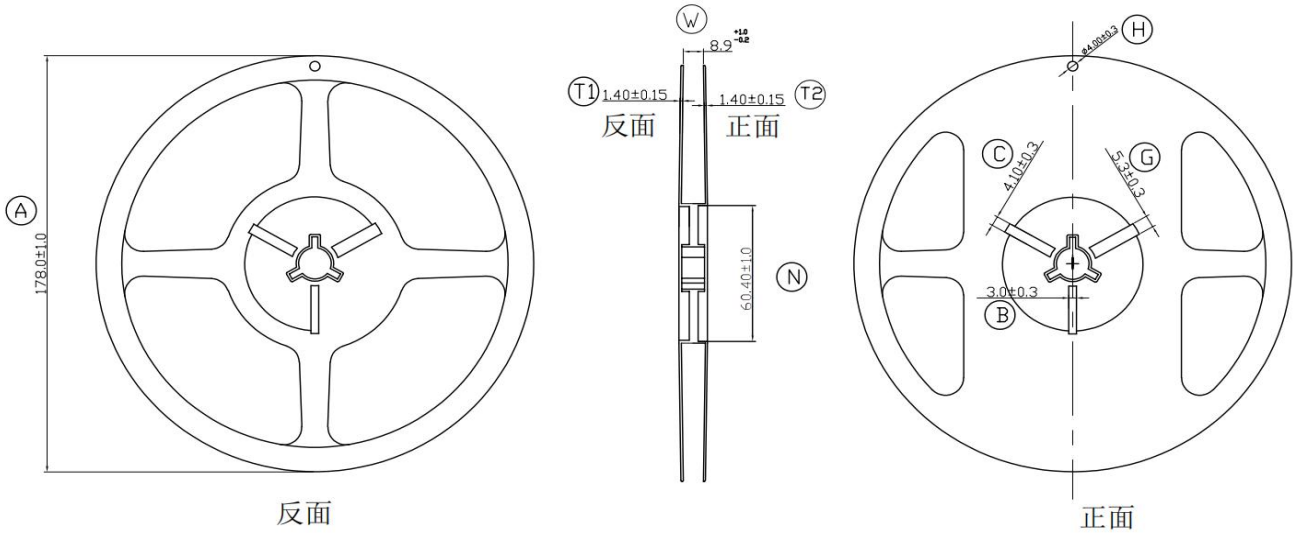

Note/备注：

1. All dimensions are in millimeters ;

单位：毫米

Tape On Reel Package/载带包装

Carrier Tape Dimensions as the following/载带尺寸

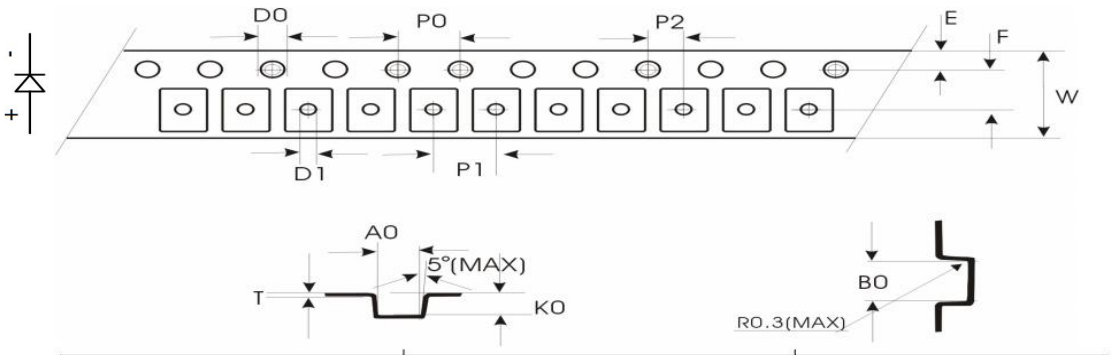

A0	3. 10±0. 1	P0	4. 00±0. 1	T	0. 20±0. 02	D0	1. 55±0. 1	10P0	40.00±0.2
B0	3. 70±0. 1	P1	4. 00±0. 1	E	1. 75±0. 1	D1	1. 05±0. 1		
K0	0. 95±0. 05	P2	2. 00±0. 1	F	3. 50±0. 05	W	8. 00±0. 1		

Note/备注：

(1) The cathode is oriented towards the tape sprocket hole in accordance with data sheet specifications.

根据图表显示，负极朝向载带孔。

(2) MPQ:4000pcs per reel.

4000颗/每盘。

Moisture Resistant Packaging/防潮包装

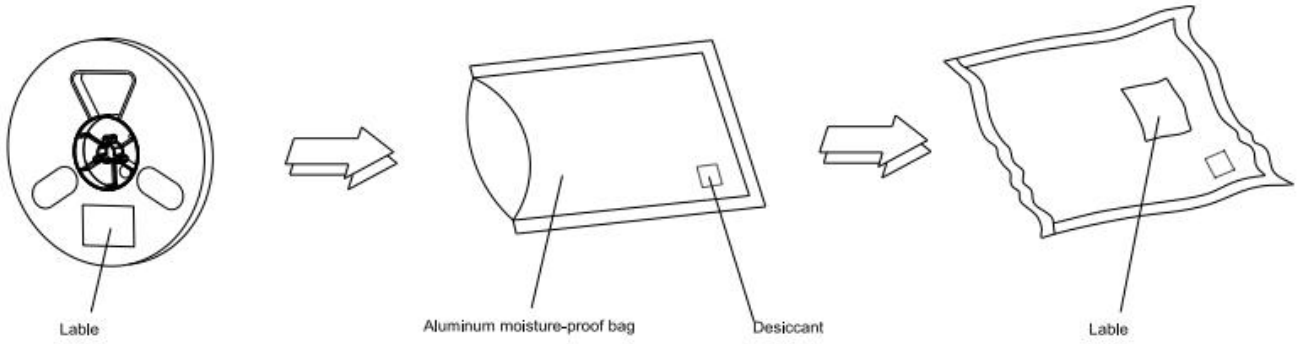

Soldering Characteristics/焊接工艺

Reflow Soldering Profile/回流曲线

Product complies to MSL Level 2 acc. to JEDEC J-STD-020E

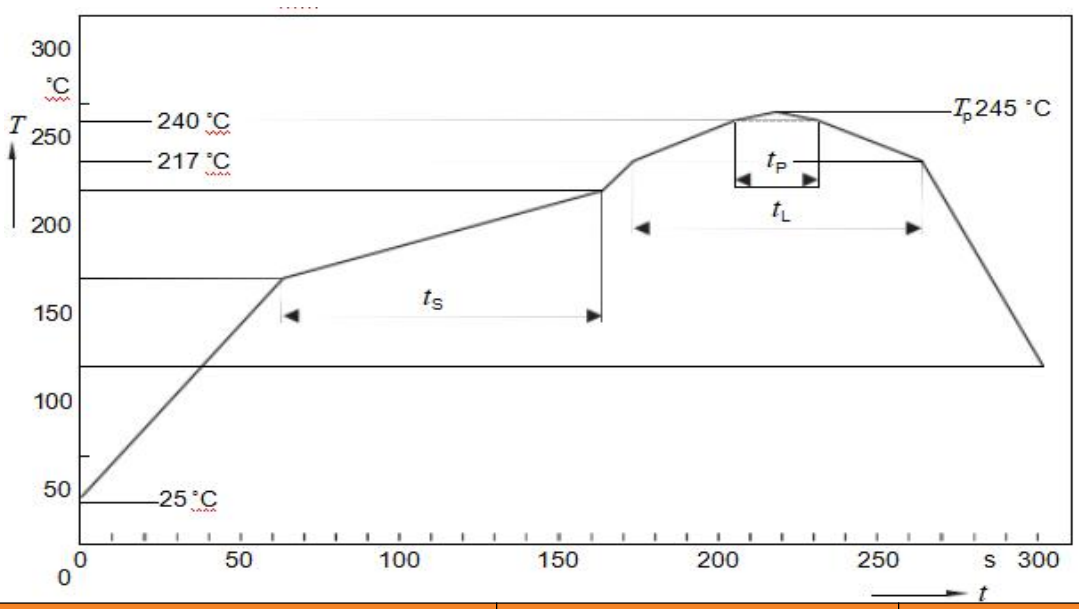

Profile Feature	Pb-Free Assembly	Unit Einheit
Average Ramp-up Rate 25 °C to 150 °C	2-3	°C /sec
Preheat Temperature Min.	150	sec
Preheat Temperature Max.	200	sec
Preheat Time	60- 120	sec
Time Maintained Above Temperature	217	°C
Time Maintained Above Time	60-90	sec
Peak Temperature (max.)	260	°C

c. Reflow soldering should not be done more than twice.

d. In soldering process, stress on the LEDs during heating should be avoided.

e. After soldering, do not bend the circuit board.

Cautions/注意事项

1. Moisture-Proof Package/防潮包装

1.1 When moisture is absorbed into the LED package it may vaporize and expand products during soldering. There is a possibility that this may cause exfoliation of the contacts and damage to the optical characteristics of the LEDs. For this reason, the moisture-proof package is used to keep moisture to a minimum in the package.
当水分被吸收到 LED 包装中时，它可能会在焊接过程中蒸发并膨胀产品。这可能会导致触点脱落并损坏 LED 的光学特性。因此，防潮包装需要将包装中的水分保持在最低限度。

2. Current limiting/限流

2.1 A resistor should be used to limit current spikes that can be caused by voltage fluctuations. Otherwise damage could be occur.
应使用电阻器限制电压波动引起的电流峰值。否则可能会发生损坏。

3. Iron Soldering/烙铁焊接

3.1 Hand soldering is not recommended for regular production. These guidelines are for rework only.
常规生产不建议手工焊接。此方法仅适用于返工。

3.2 The recommended condition is less than 5s at 260℃.
建议的条件是在 260℃时小于 5s。

3.3 The time must be shorter for higher temperatures. (+10℃→-1sec)
对于较高的温度，时间必须更短。（+10℃→-1 秒）

3.4 The power dissipation of the soldering iron should be lower than 25W and the surface temperature of the device should be controlled at under 300℃.
烙铁的功耗应低于 25W，器件表面温度应控制在 300℃以下。

4. Storage Conditions/储存条件

4.1 Before opening the package：The LEDs should be kept at 30℃ or less and 90%RH or less. The LEDs should be used within a year. When storing the LEDs, moisture-proof packaging with moisture-absorbent material is recommended.
打开包装前：LED 应保持在 30℃或以下，相对湿度为 90%或以下。LED 应在一年内使用。储存 LED 时，建议使用吸湿材进行防潮包装。

4.2 After opening the package: The LEDs should be kept at 30℃ or less and 60%RH or less. The LEDs should be soldered within 168 hours (7 days) after opening the package. If unused LEDs remain, they should be stored in moisture-proof packages, such as sealed containers with packages of moisture-absorbent material. It is also recommended to return the LEDs to the original moisture-proof bag and to reseal the moisture-proof bag again.
打开包装后：LED 应保持在 30℃或以下，相对湿度为 60%或以下。LED 应在打开包装后 168 小时（7 天）内焊接。如果仍有未使用的 LED 灯珠，则应将其储存在防潮包装中，例如带有吸湿材料包装的密封容器中。也建议将 LED 灯珠放回原来的防潮袋，并再次重新密封防潮袋。

4.3 If the moisture-absorbent material has faded away or the LEDs have exceeded the recommended storage time, baking treatment should be performed using the following conditions. Baking treatment: more than 24 hours at 65±5℃
如果吸湿材料褪色或 LED 超过建议的存储时间，则应使用以下条件进行除湿处理。除湿处理：在 65±5℃下烘烤超过 24 小时。

4.4 H-Great LED electrode sections are comprised of a silver-plated copper alloy. The silver surface may be affected by environments which contain corrosive gases and so on. Please avoid condition which may cause difficulty environments during soldering operations. It is recommended that the user uses the LEDs as soon as possible.
华皓 LED 灯珠电极部分由镀银铜合金组成。银表面可能受到含有腐蚀性气体等环境的影响。在焊接操作过程中，请避免出现可能由环境导致问题的情况。建议用户尽快使用 LED 灯珠。

4.5 Please avoid rapid transitions in ambient temperature, especially in high humidity environments where condensation can occur.
请避免环境温度快速变化，尤其是在可能发生冷凝的高湿度环境中。

5. Handling of Silicone LEDs/硅胶 LED 灯珠处理

5.1 Avoid silicone resin parts especially with sharp tools such as tweezers.
避免使用锋利工具，尤其是使用镊子等接触硅胶部分。

5.2 Avoid leaving fingerprints on silicone part.
避免在硅胶零件上留下指纹。

6. Usage/用途

6. 1Do not exceed the values given in this specification.
不要超出本规范中给出的使用条件。

Revision History

Versions	Description	Release Date
A0	Standard data sheet	2024/2/29